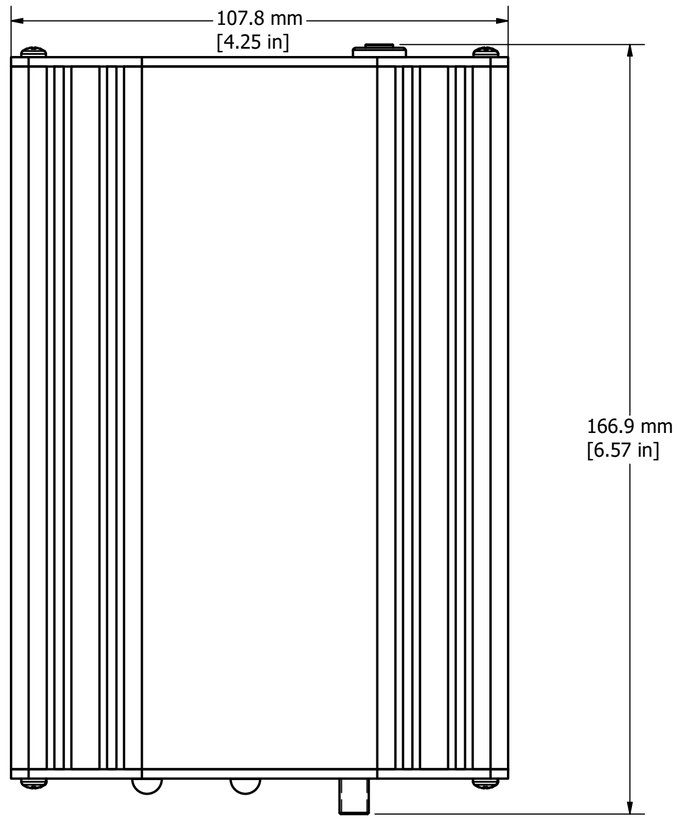

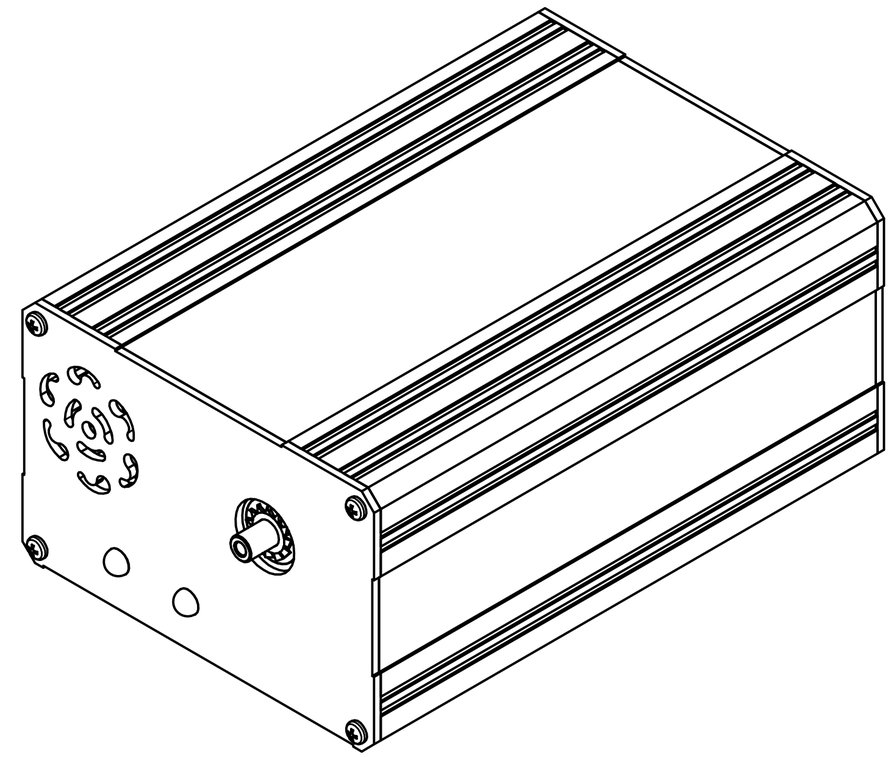

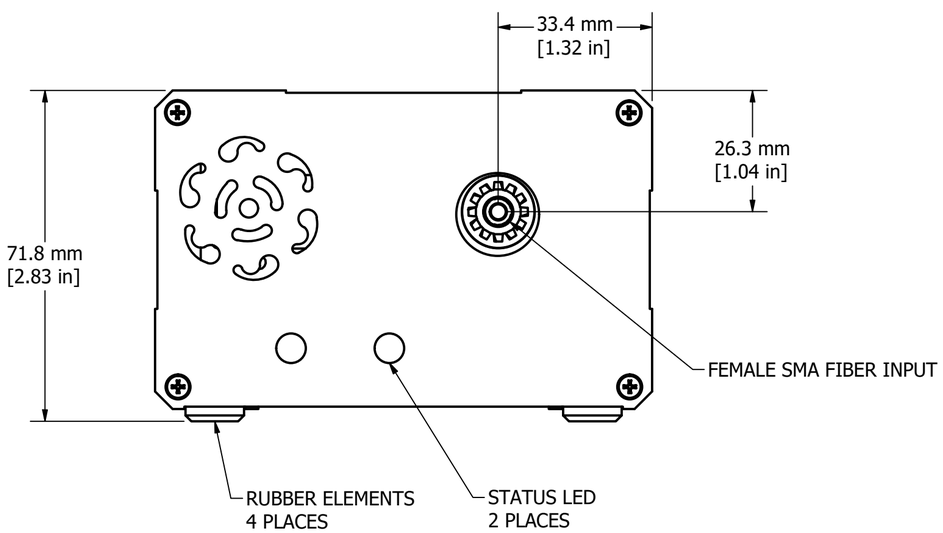

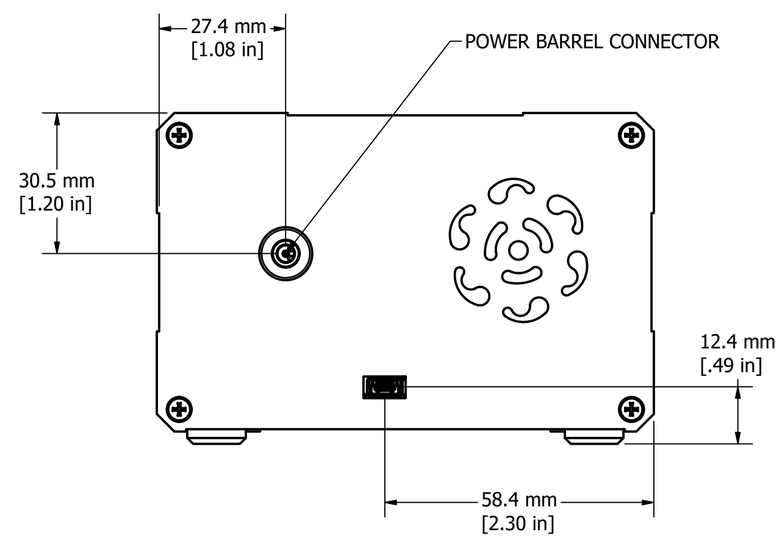

FOR INFORMATION ONLY
NOT FOR MANUFACTURING PURPOSES

RELEASE DATE AUGUST 12, 2026	STELLARNET www.stellarnet.us
POWER SUPPLY / DRAW 5 VDC via USB (<2.5W)	TITLE
OPERATING TEMPERATURE 15C to 25C	BLACK COMET SR TEC SPECTROMETER
RELATIVE HUMIDITY < 50% RH (Non-condensing)	
DEW POINT LIMIT: Must Not Exceed +5C	SIZE C / APPROX WEIGHT 1020 g [36oz] / REV A
PROPRIETARY NOTICE: Released solely for customer evaluation and integration.	SHEET 1 OF 1